DVD Player

DVP3180K

Service

DVP3180K/93

Service

Service

Service Manual

TABLE OF CONTENTS

Page

. Technical Specifications…….....1-2
. Safety Instruction, Warning & Notes….……...…....1-3
. Mechanical and Dismantling Instructions…….....2-1
. Region Code, Software Version& Upgrades…….....3-1
. Trouble Shooting Chart…….....4-1
. Wiring Diagram……..…….....5-1
. Electrical Diagrams and Print-layouts..…..……...……6-1
. Set Mechanical Exploded view .....…..7-1
. Revision List.....……..…..…...8-1

©Copyright 2007 Philips Consumer Electronics B.V. Eindhoven, The Netherlands
All rights reserved. No part of this publication may be reproduced, stored in aretrieval system or transmitted, in any form or by any means, electronic, mechanical, photocopying, or otherwise without the prior permission of Philips.

CLASS 1
LASER PRODUCT

Published by TCL-HY 701 Service Audio Printed in The Netherlands Subject to modification

GB 3139 785 32430

Version 1.0

PHILIPS

Technical Specifications

TV Standard	(PAL/50Hz)	(NTSC/60Hz)
Number of lines	625	525
Playback	Multi standard	(PAL/NTSC)

Video Performance

Video DAC	10 bit, 108MHz
YPbPr:	0.7Vpp ~ 75 ohm
Video output	1Vpp ~ 75 ohm

Video Format

Digital Compression	MPEG 2 for DVD, SVCD MPEG 1 for VCD

DVD	**50Hz**	**60Hz**
Horiz. resolution	720 pixels	720 pixels
Vertical resolution	576lines	480 lines
VCD	**50Hz**	**60Hz**
Horiz. resolution	352 pixels	352 pixels
Vertical resolution	288lines	240 lines

Audio Format

Digital	MPEG/AC-3/ PCM	Compressed Digital 16, 20, 24bits fs, 44.1, 48, 96kHz
	MP3(ISO 9660)	96,112,128,256kbps & variable bit rate fs,32, 44.1,48 kHz

Analogue Sound Stereo
Dolby surround-compatible downmix from Dolby Digital multi-channel sound

Audio Performance

DA converter	24bits, 192KHz	
DVD	fs 96kHz	4Hz----44kHz
	fs 48kHz	4Hz----22kHz
SVCD	fs 48kHz	4Hz----22kHz
	fs 44.1kHz	4Hz----20kHz
CD/VCD	fs 44.1kHz	4Hz----20kHz
Signal-Noise (1kHz)		>95dB
Dynamic Range (1kHz)		>85dB
Cross talk (1kHz)		>85dB
Distortion/Noise (1kHz)		>75dB
MPEG MP3		MPEG Audio L3

Connections

YpbPr	Cinch 3x
Video output	Cinch(yellow)
Audio L+R output	Cinch (white/red)
Digital output	1 coaxial IEC60958 for CDDA/LPCM IEC61937 for MPEG1/2, Dolby Digital

Cabinet

Dimensions (w X h X d)	360 x 37 x 235 mm
Weight	Approximately 2.0 kg

Power Consumption

Power supply	110V ~ 240V 50 / 60HZ
Power consumption in standby mode	<1.0W
Power consumption	<10W

Specifications subject to change without prior notice

Safety Instructions, Warnings, Notes

Safety Instructions

1. General Safety

Safety regulations require that during a repair:

. Connect the unit to the mains via an isolation transformer.

. Replace safety components indicated by the symbol ⚠, only by components identical to the original ones. Any other component substitution (other than original type) may increase risk of fire or electrical shock hazard.

Safety regulations require that after a repair, you must return the unit in its original condition. Pay, in particular, attention to the following points:

. Route the wires/cables correctly, and fix them with the mounted cable clamps.

. Check the insulation of the mains lead for external damage.

. Check the electrical DC resistance between the mains plug and the secondary side:

1) Unplug the mains cord, and connect a wire between the two pins of the mains plug.
2) Set the mains switch the “on” position (keep the mains cord unplug).
3) Measure the resistance value between the mains plug and the front panel, controls, and chassis bottom.
4) Repair or correct unit when the resistance measurement is less than 1MΩ.
5) Verify this, before you return the unit to the customer/user (ref. UL-standard no. 1492).
6) Switch the unit “off”, and remove the wire between the two pins of the mains plug.

2. Laser Safety

This unit employs a laser. Only qualified service personnel may remove the cover, or attempt to service this device (due to possible eye injury).

Laser device unit

Type : Semiconductor laser GaAlAs

Wavelength : 650nm (DVD)

: 780nm (VCD/CD)

Output power : 7mW (VCD/CD)

: 10mW (DVD)

Beam divergence: 60 degree

Note: Use of controls or adjustments or performance of procedure other than those specified herein, may result in hazardous radiation exposure. Avoid direct exposure to beam.

Warnings

1. General

. All ICs and many other semiconductors are susceptible to electrostatic discharges (ESD). Careless handing during repair can reduce life drastically. Make sure that, during repair, you are at the same potential as the mass of the set by a wristband with resistance. Keep components and tools at this same potential. Available ESD protection equipment:

1) Complete kit ESD3 (small tablemat, wristband, connection box, extension cable and earth cable) 4822 310 10671.
2) Wristband tester 4822 344 13999.

. Be careful during measurements in the live voltage section. The primary side of the power supply, including the heat sink, carries live mains voltage when you connect the player to the mains (even when the player is “off”!). It is possible to touch copper tracks or components in this unshielded primary area, when you service the player. Service personnel must take precautions to prevent touching this area or components in this area. A “lighting stroke” and a stripe-marked printing on the printed wiring board, indicate the primary side of the power supply.

. Never replace modules, or components, while the unit is “on”.

2. Laser

. The use of optical instruments with this product, will increase eye hazard.

. Only qualified service personnel may remove the cover or attempt to service this device, due to possible eye injury.

. Repair handing should take place as much as possible with a disc loaded inside the player.

. Text below is placed inside the unit, on the laser cover shield:

> CAUTION: VISIBLE AND INVISIBLE LASER RADIATION WHEN OPEN, AVOID EXPOSURE TO BEAM.

Notes: Manufactured under licence from Dolby Laboratories. The double-D symbol is trademark of Dolby Laboratories, Inc. All rights reserved.

Lead-Free Requirement for Service

INDENTIFICATION:

Regardless of special logo (not always indicated)

One must treat all sets from 1.1.2005 onwards, according next rules.

Important note: *In fact also products a little older can also be treated in this way as long as you avoid mixing solder-alloys (leaded/ lead-free). So best to always use SAC305 and the higher temperatures belong to this.*

Due to lead-free technology some rules have to be respected by the workshop during a repair:

- Use only lead-free solder alloy Philips SAC305 with order code 0622 149 00106. If lead-free solder-paste is required, please contact the manufacturer of your solder-equipment. In general use of solder-paste within workshops should be avoided because paste is not easy to store and to handle.
- Use only adequate solder tools applicable for lead-free solder alloy. The solder tool must be able
  - o To reach at least a solder-temperature of 400°C,
  - o To stabilize the adjusted temperature at the solder-tip
  - o To exchange solder-tips for different applications.
- Adjust your solder tool so that a temperature around 360°C – 380°C is reached and stabilized at the solder joint. Heating-time of the solder-joint should not exceed ~ 4 sec. Avoid temperatures above 400°C otherwise wear-out of tips will rise drastically and flux-fluid will be destroyed. To avoid wear-out of tips switch off un-used equipment, or reduce heat.
- Mix of lead-free solder alloy / parts with leaded solder alloy / parts is possible but PHILIPS recommends strongly to avoid mixed
  solder alloy types (leaded and lead-free). If one cannot avoid, clean carefully the
  solder-joint from old solder alloy and re-solder with new solder alloy (SAC305).
- Use only original spare-parts listed in the Service-Manuals. Not listed standard-material (commodities) has to be purchased at external companies.
- Special information for BGA-ICs:
  - always use the 12nc-recognizable soldering temperature profile of the specific BGA (for de-soldering always use highest lead-free temperature profile, in case of doubt)
  - lead free BGA-ICs will be delivered in so-called 'dry-packaging' (sealed pack including a silica gel pack) to protect the IC against moisture. After opening, dependent of MSL-level seen on indicator-label in the bag, the BGA-IC possibly still has to be baked dry. This will be communicated via AYS-website.
  Do not re-use BGAs at all.
- For sets produced before 1.1.2005, containing leaded soldering-tin and components, all needed spare-parts will be available till the end of the service-period. For repair of such sets nothing changes.
- On our website:
  www.atyourservice.ce.Philips.com

You find more information to:

BGA-de-/soldering (+ baking instructions)
Heating-profiles of BGAs and other ICs used in Philips-sets

You will find this and more technical information within the "magazine", chapter "workshop news".

For additional questions please contact your local repair-helpdesk.

Mechanical and Dismantling Instructions

Dismantling Instructions

The following guidelines show how to dismantle the player.

Step1: Remove 5 screws around the Top Cover. And remove it. (Figure 1)

Step2: If it is necessary to dismantle Loader or Front Panel, It should be removed the front door assembly first.(Figure 2)

If the tray can't open in normal way, you can make it by pushing the guider manually using the slot below the bottom chassis with a tool. (Figure 2&3)

Note: Make sure to operate gently otherwise the guider would be damaged.

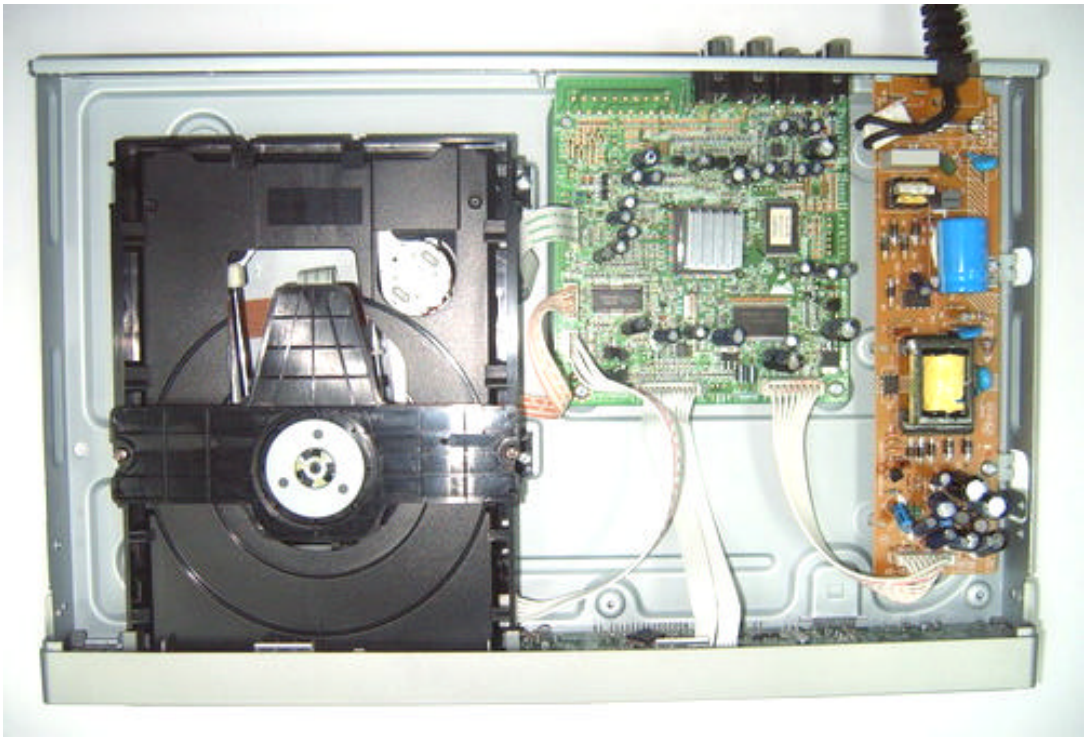

Figure 1

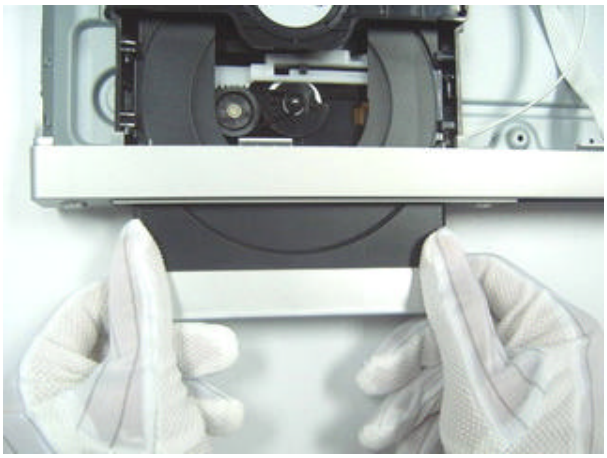

Figure 2

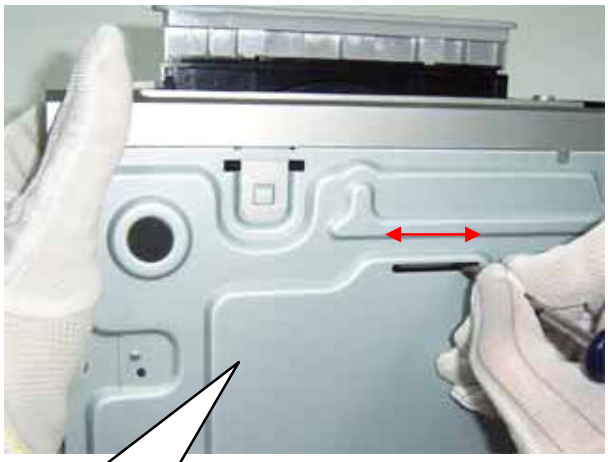

Figure 3

Push the guider until the tray out. Make sure to operate gently to avoid damage happening.

Mechanical and Dismantling Instructions

Step3: Dismantling Loade : First, disconnect the 3 connectors aiming in the figure, and then remove the 4 screws at both side of the loader. (Figure 4)

Step4:Dismantling Front Panel:disconnect the connector aiming in the figure, then release the snaps on the both side of Front panel and gently pull the panel out from the set. (Figure 5&6)

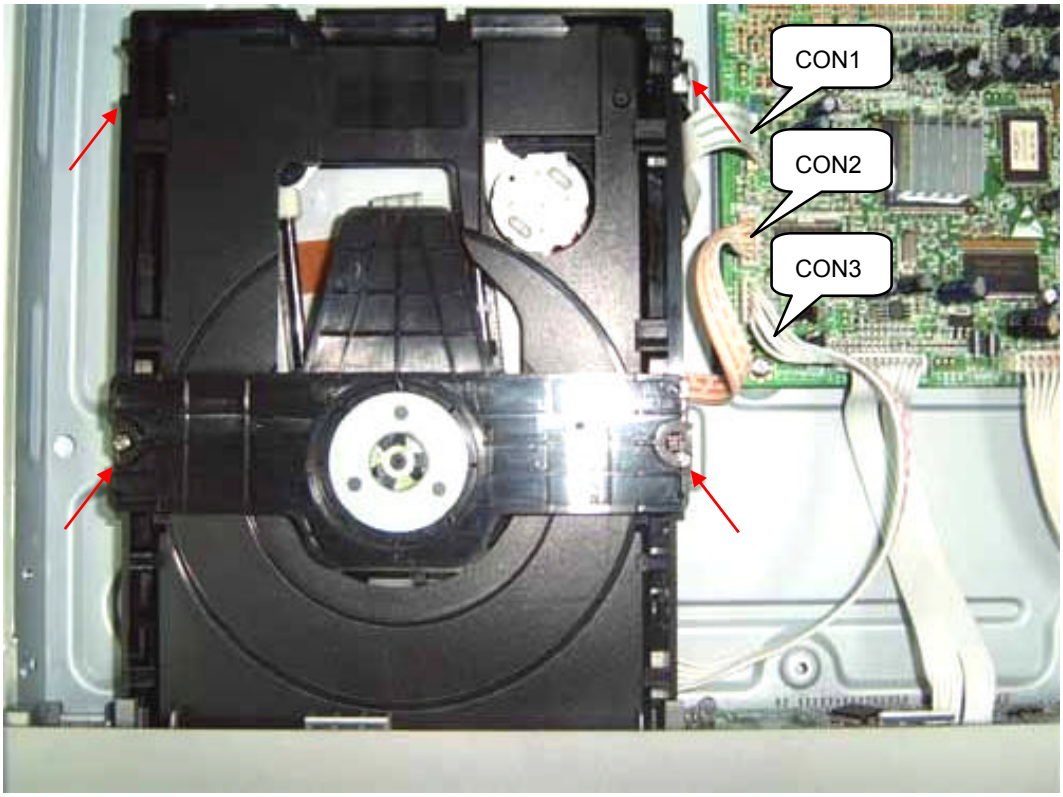

Figure 4

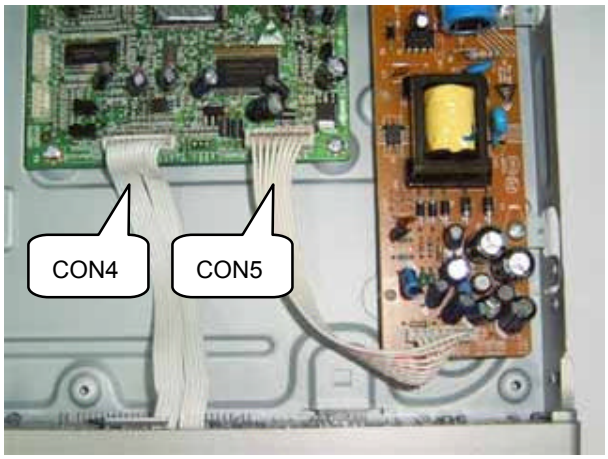

Figure 5

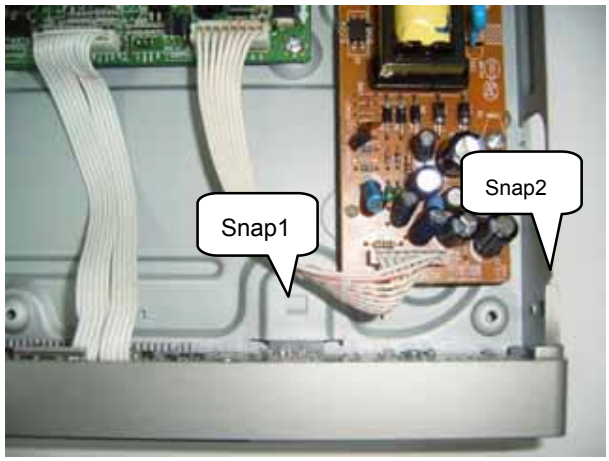

Figure 6

Mechanical and Dismantling Instructions

Step5:Dismantling Main Board, first disconnect the 2 connectors, and then remove the 4 screws. (Figure 7)

Step6: Remove the 2 screws on power board to dismantle the power board. (Figure 8)

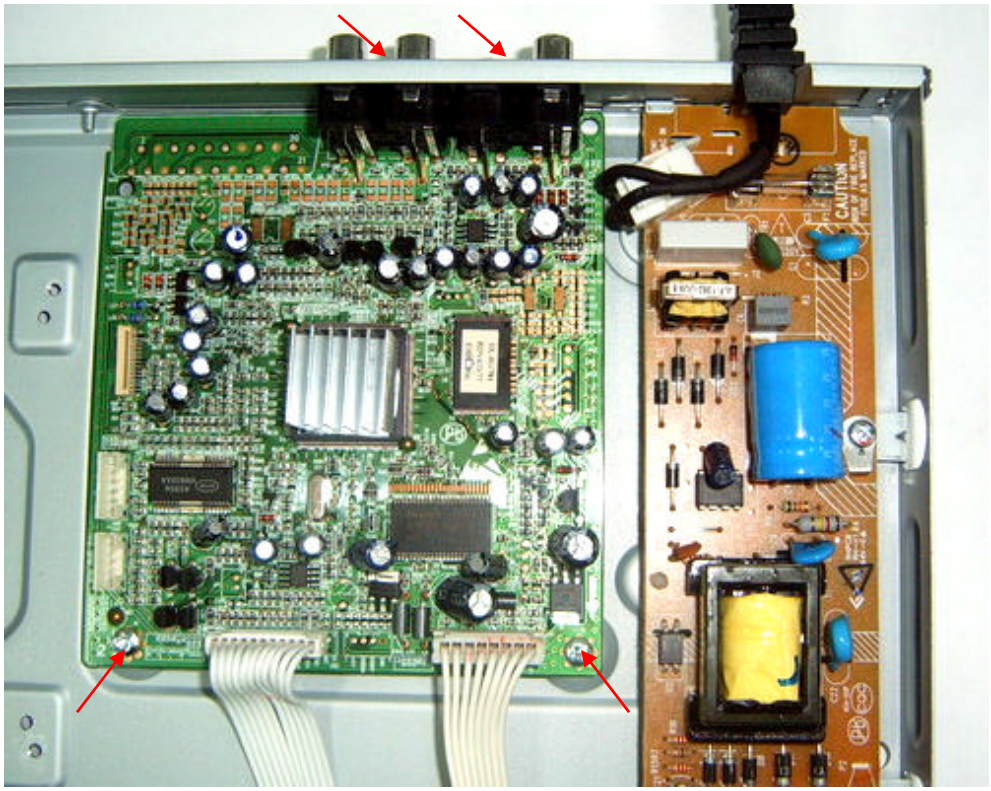

Figure 7

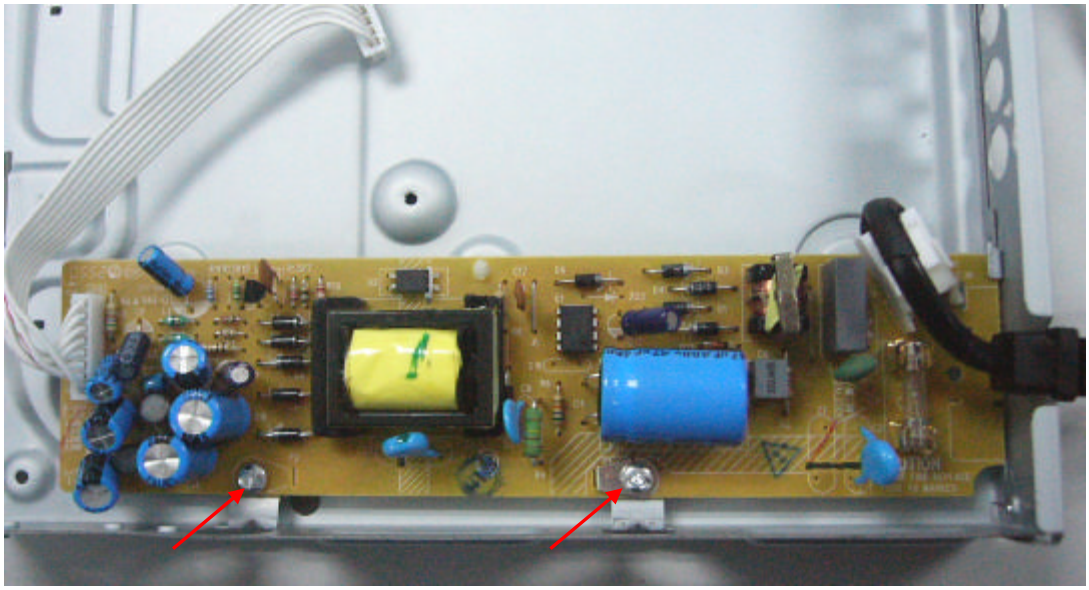

Figure 8

Mechanical and Dismantling Instructions

ATTENTION OF REPAIRING

Make sure adding silicon glue to fix the capacitor C4 after repairing. (Avoid the hazard of C4 touching the Top Cover)

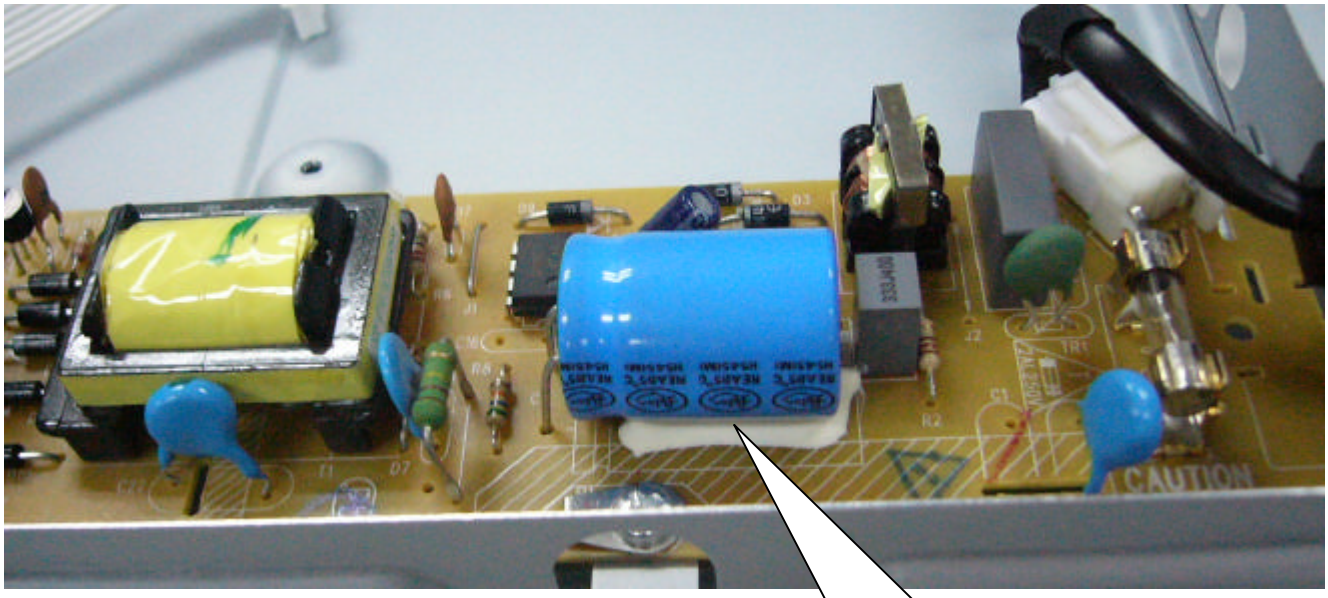

Figure 9

Add Silicon glue or Heat glue to fix C4 to keep this status

Software Upgrade

A. Preparation to upgrade software

1) Start the CD Burning software and create a new CD project (Data Disc) with the following setting:
   Label: DVP3XXX (No need the label name)
   File Name: DVP3XXX_XX.BIN
   Power on the set and open the tray, then press <6><5> to check the File Name.

Note: It is required capital letter for the File System name.

2) Burn the data onto a blank CDR

B. Procedure for software upgrade:

1) Power up the set and insert the prepared Upgrade CDR.
2) The set will starts reading disc & response with the following display on TV screen:
   SMART UPGRADE
   READ
3) About 2 seconds later, the TV screen will display
   20 SMART UPGARD
   UPGRADE TO VXXX. XX. XX.
   <X> <0>
4) After 20 seconds later, the upgrading will proceed automatically, and the TV screen display as below:
   UPGRADING…
   DON'T POWER OFF
5) The upgraded disc will automatically out when upgrading complete, then take out the disc.
6) Power off the set and restart set.

C. Read out the software versions to confirm upgrading

1) Power up the set.
2) Press <7><7><7><7> button.
   The software version and other information are display on the TV screen as follows:

XXXXXXXX	(Date)
VER: XX.XXX.XXX.	(Version of the certification)
SC: XXX	(Version of the servo)
F/ W ID	(Version of the kernel and the software)
CHIP ID	(Check sum)
PASSWORD	
REGION	
RATING	
CURRENT MODEL	
EXIT SETUP	

Caution: The set must not be power off during upgrading, in that case the decoder board will be damaged entirely.

Spindle motor does not move

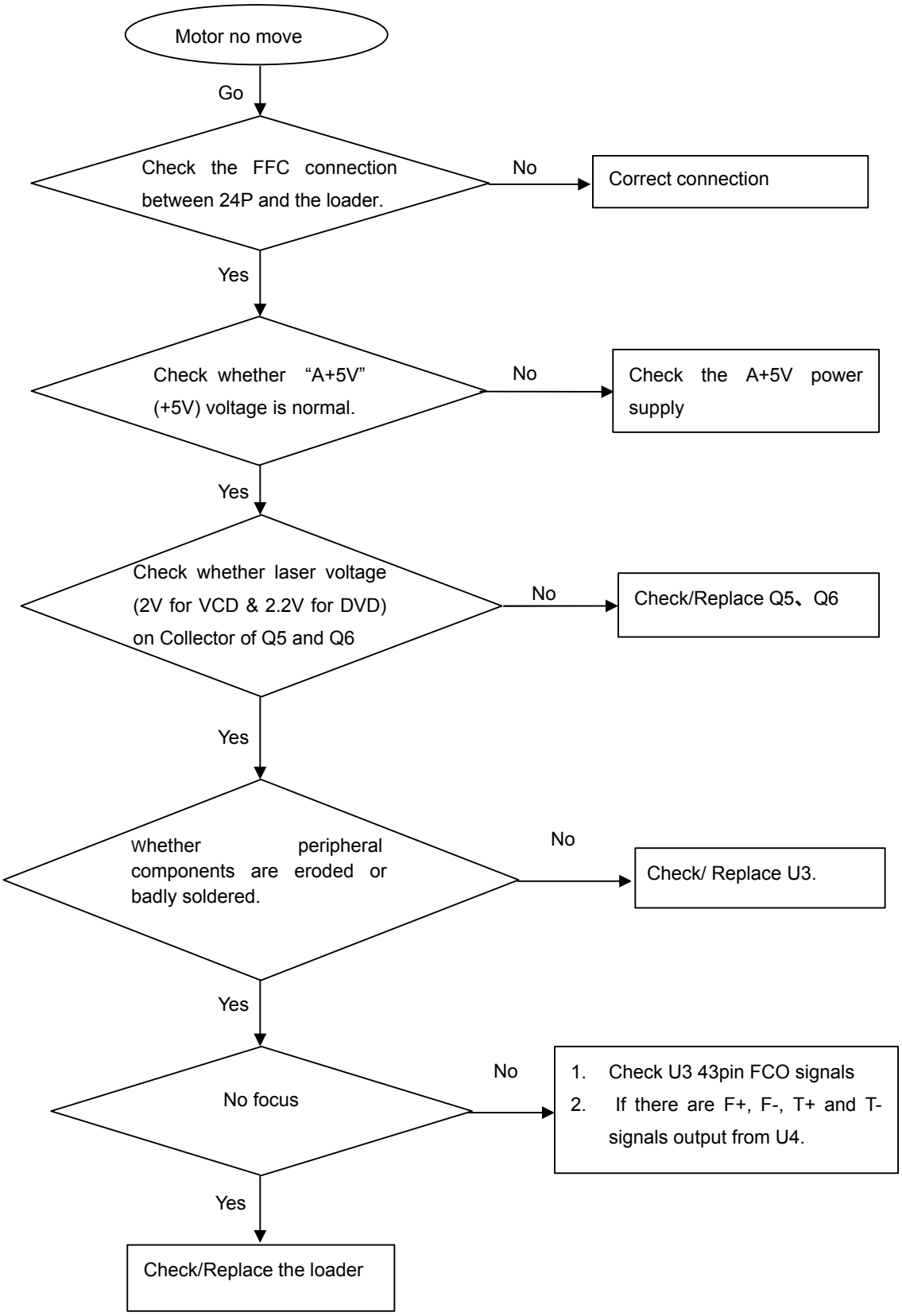

The power can not be on or off

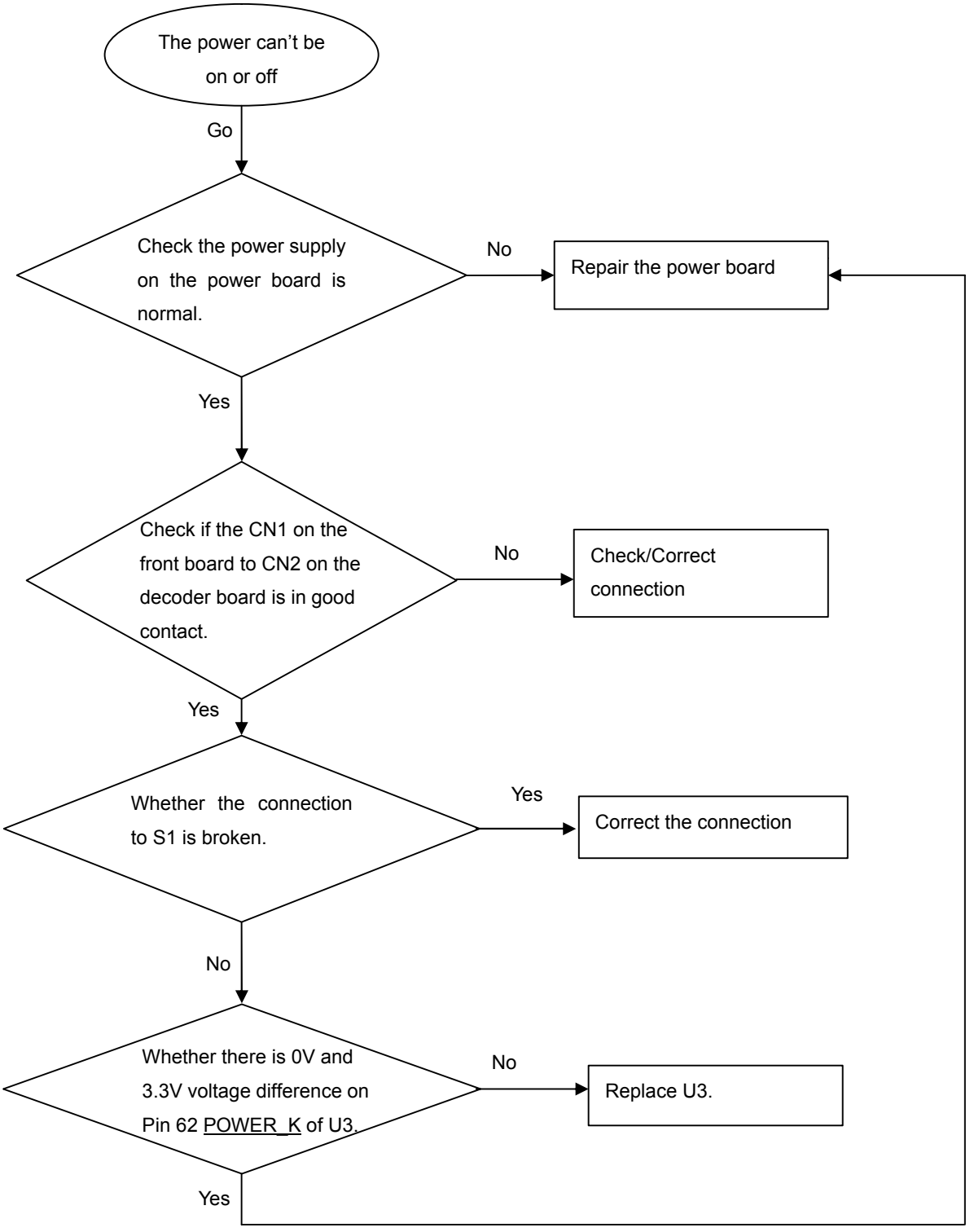

All output voltages on the power board is 0V or deviated.

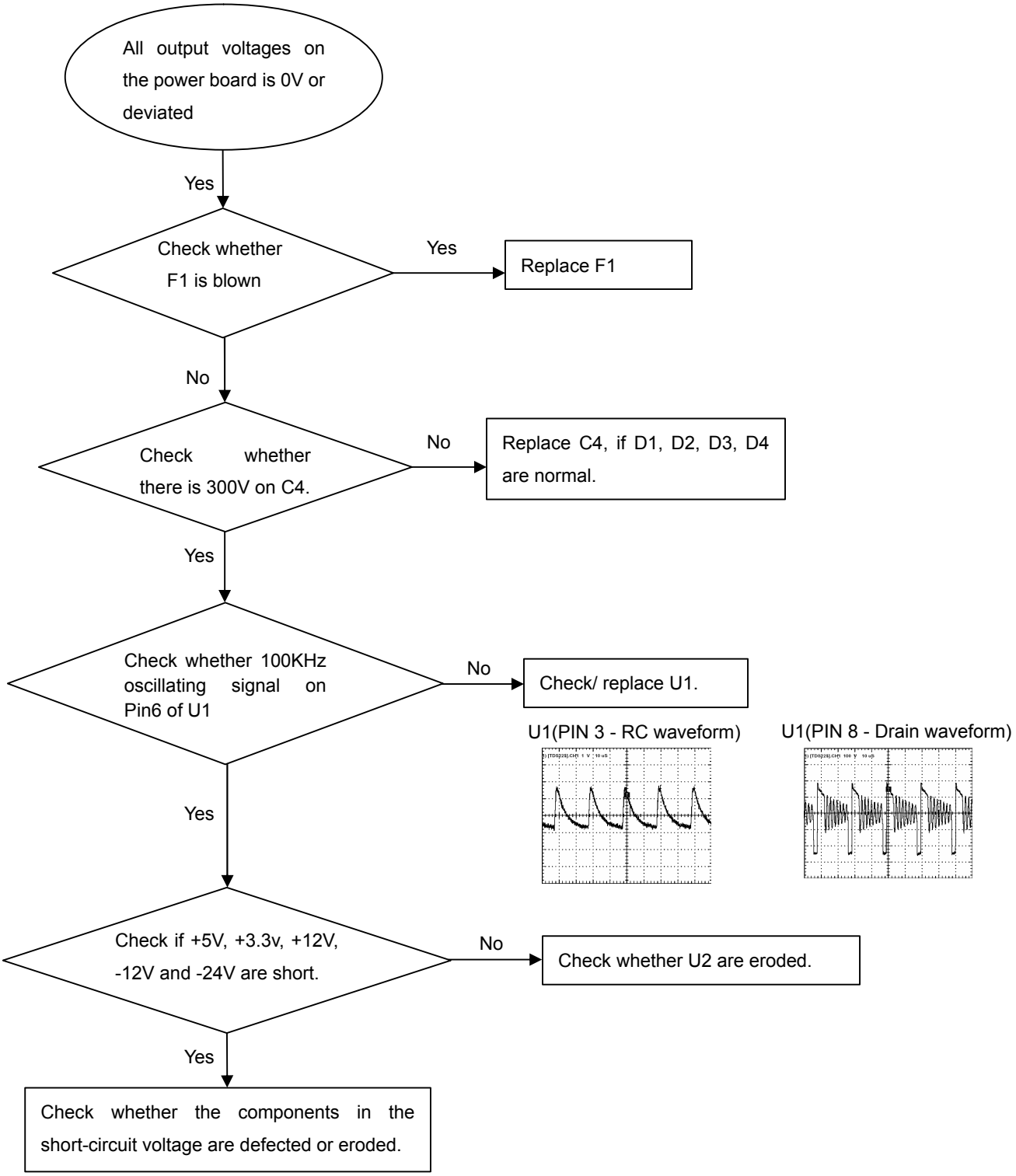

Disc cannot be read.

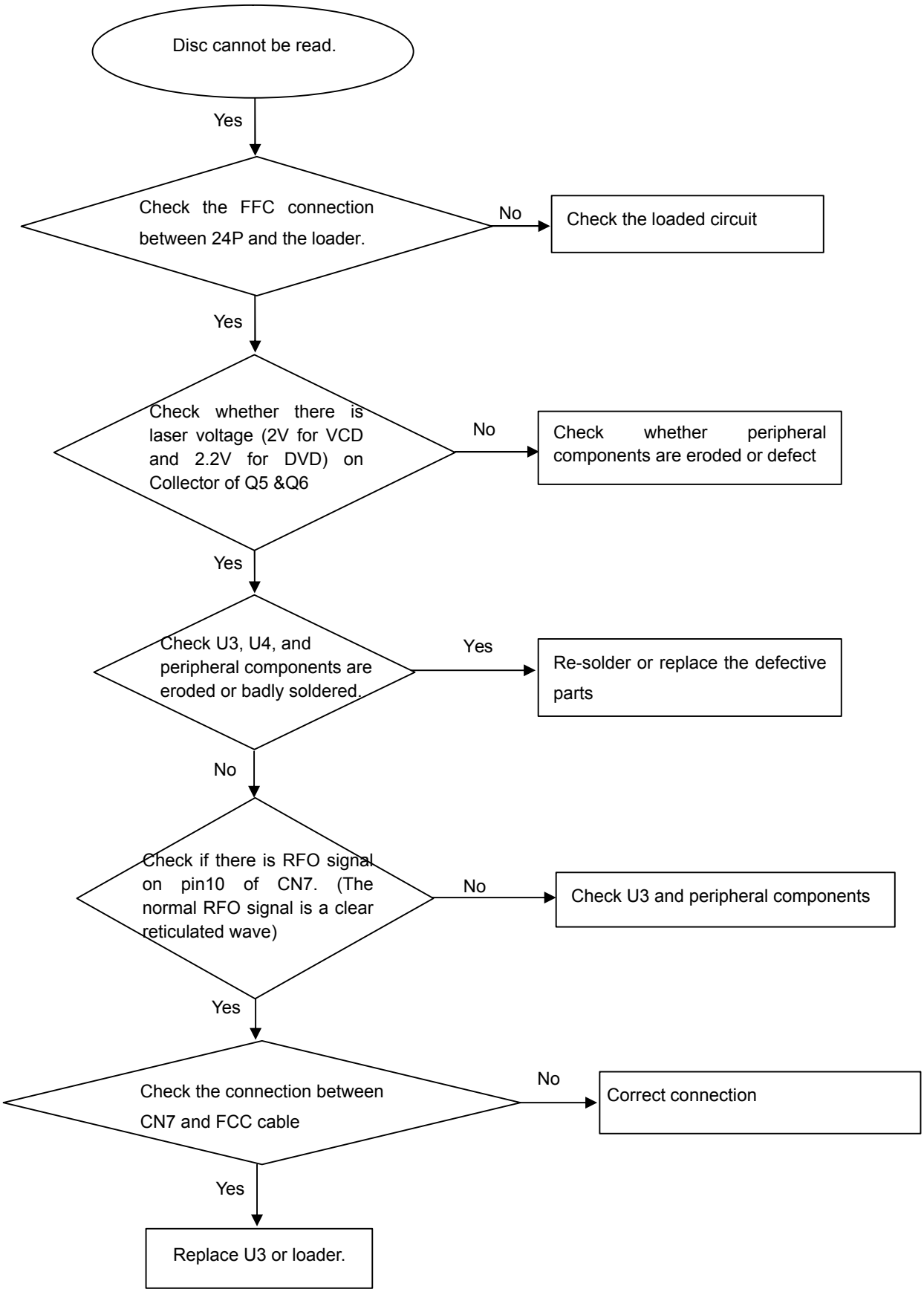

Only DVD disc or only disc except DVD can be played

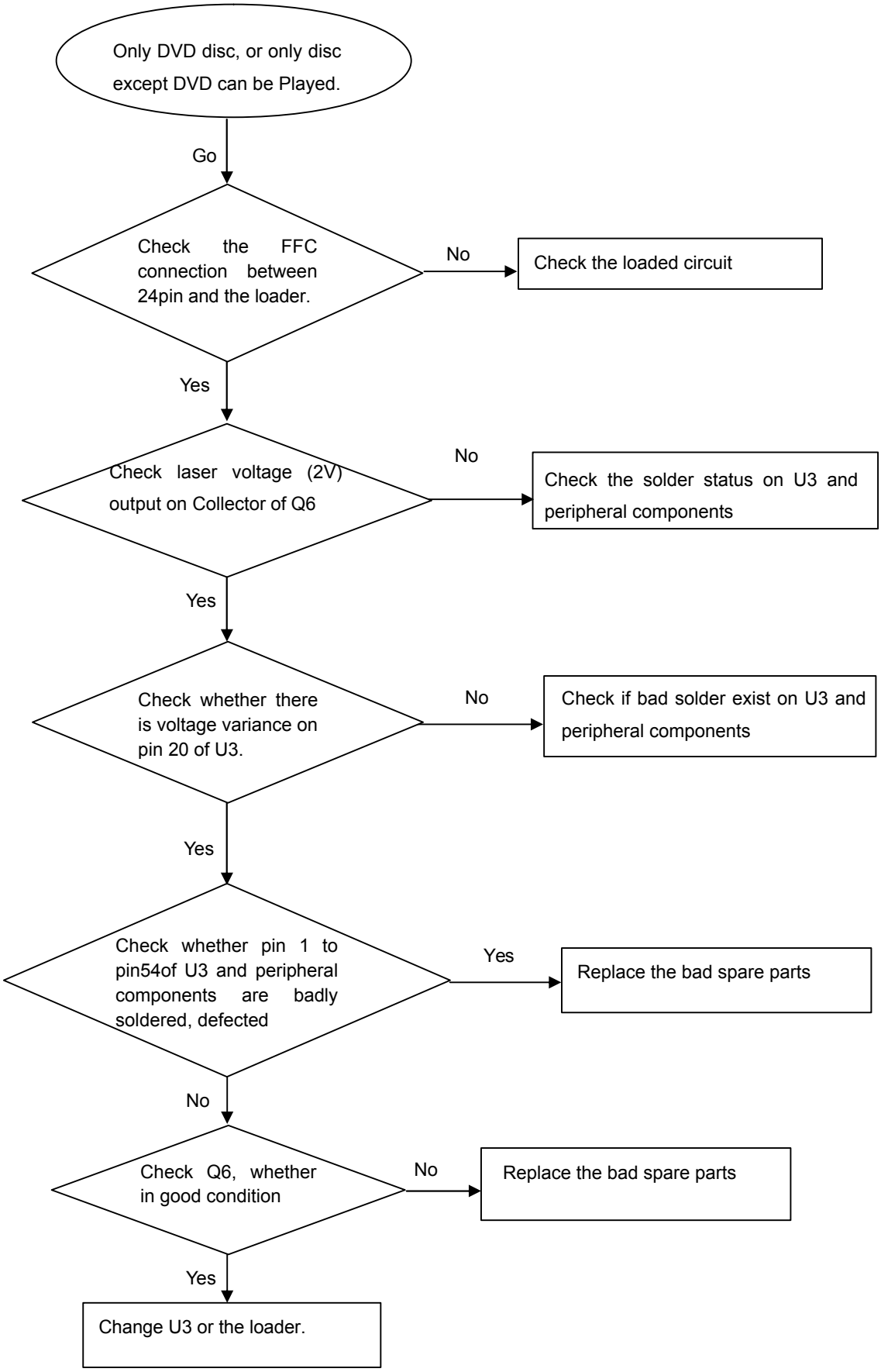

Distorted audio and loud noise

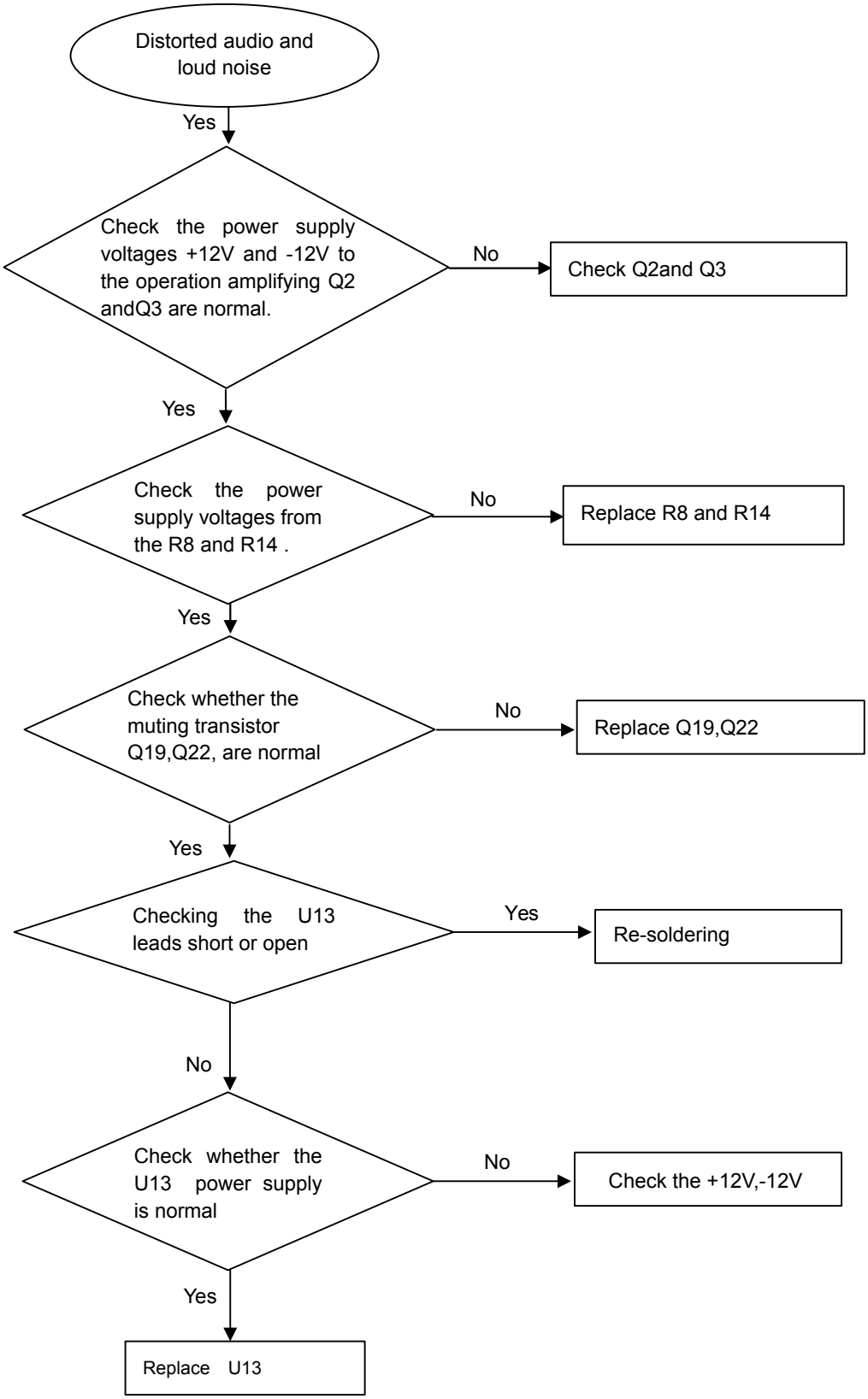

Abnormal color of video picture

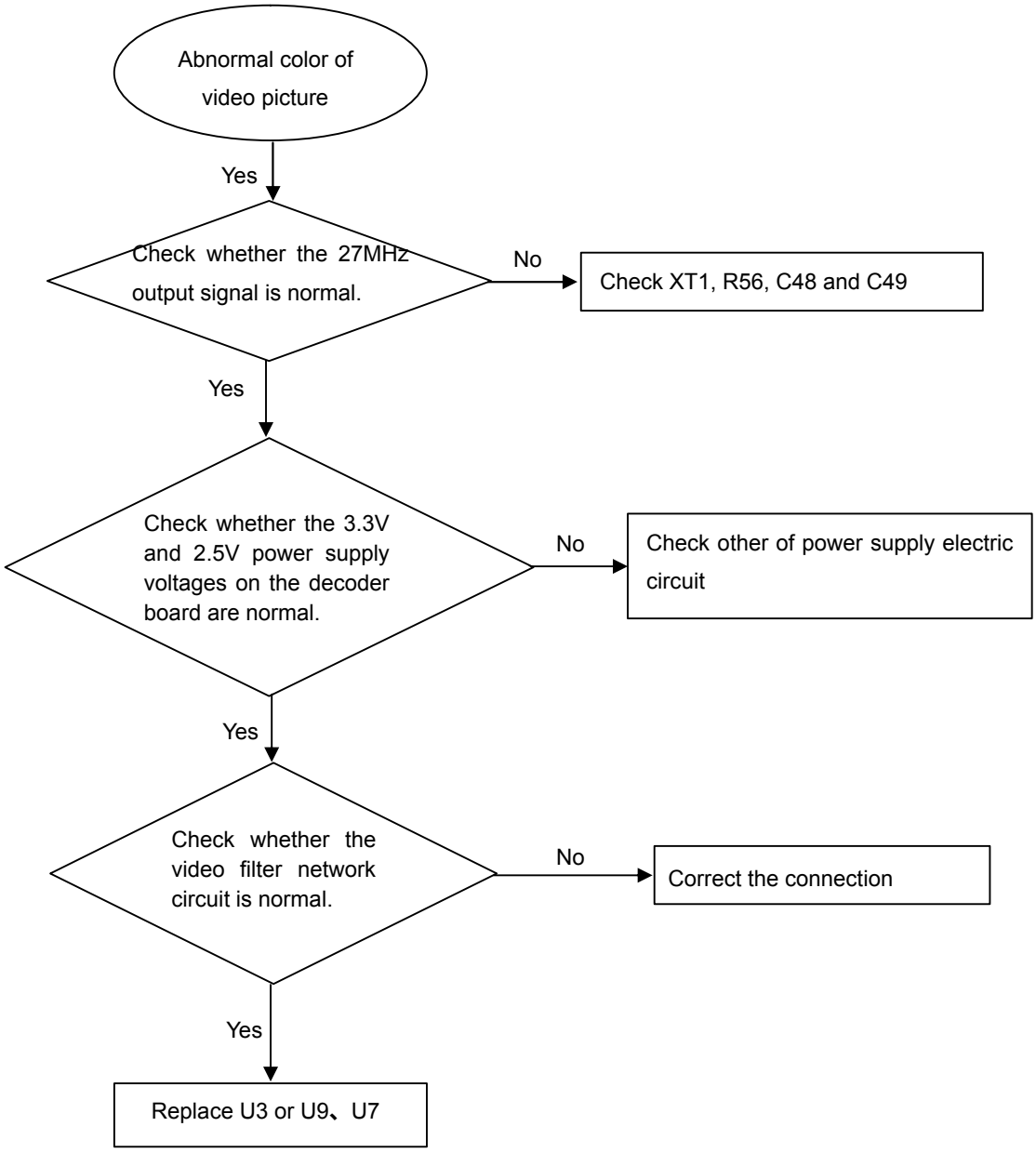

Remote reception is insensitive or fails.

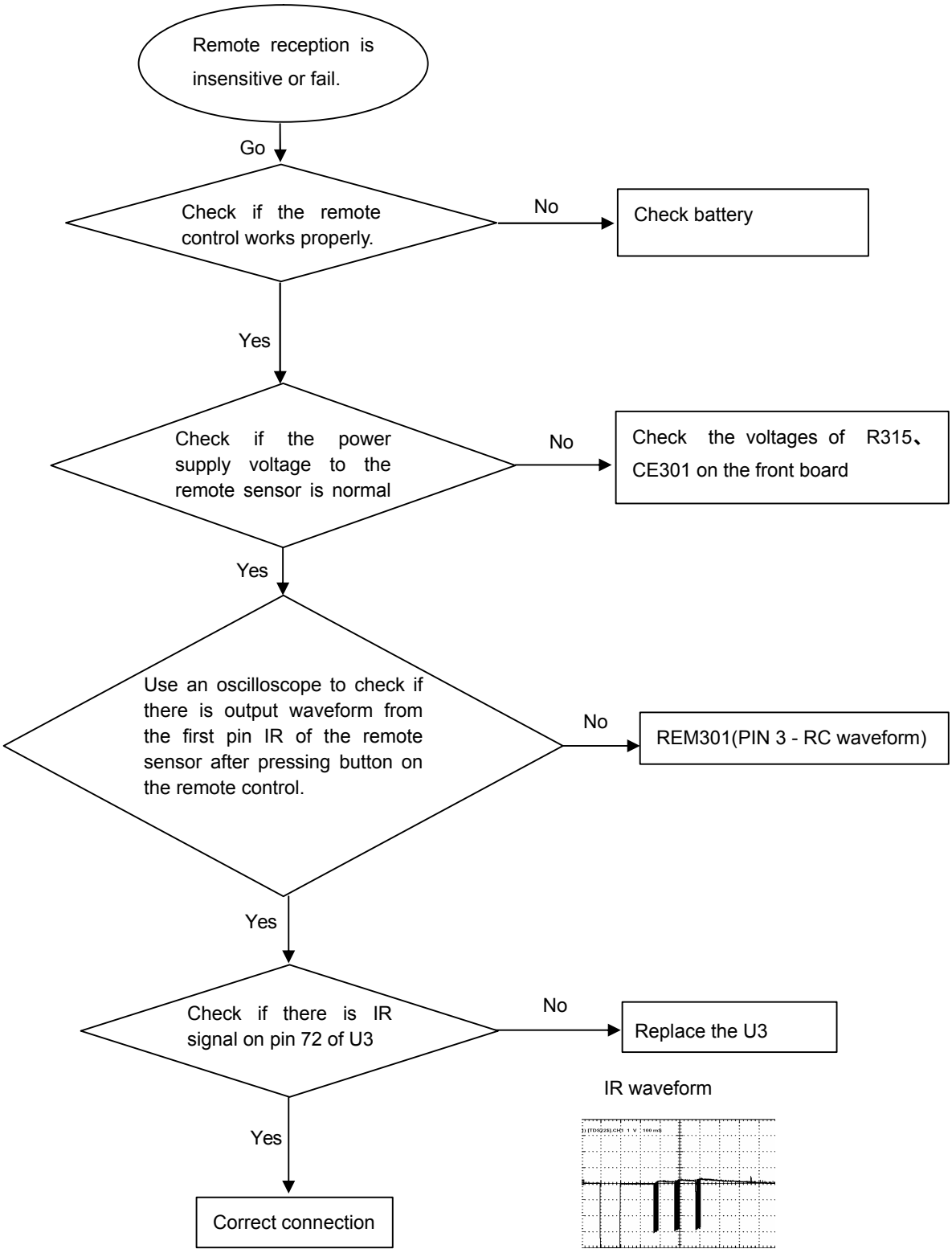

No video picture, no sound.

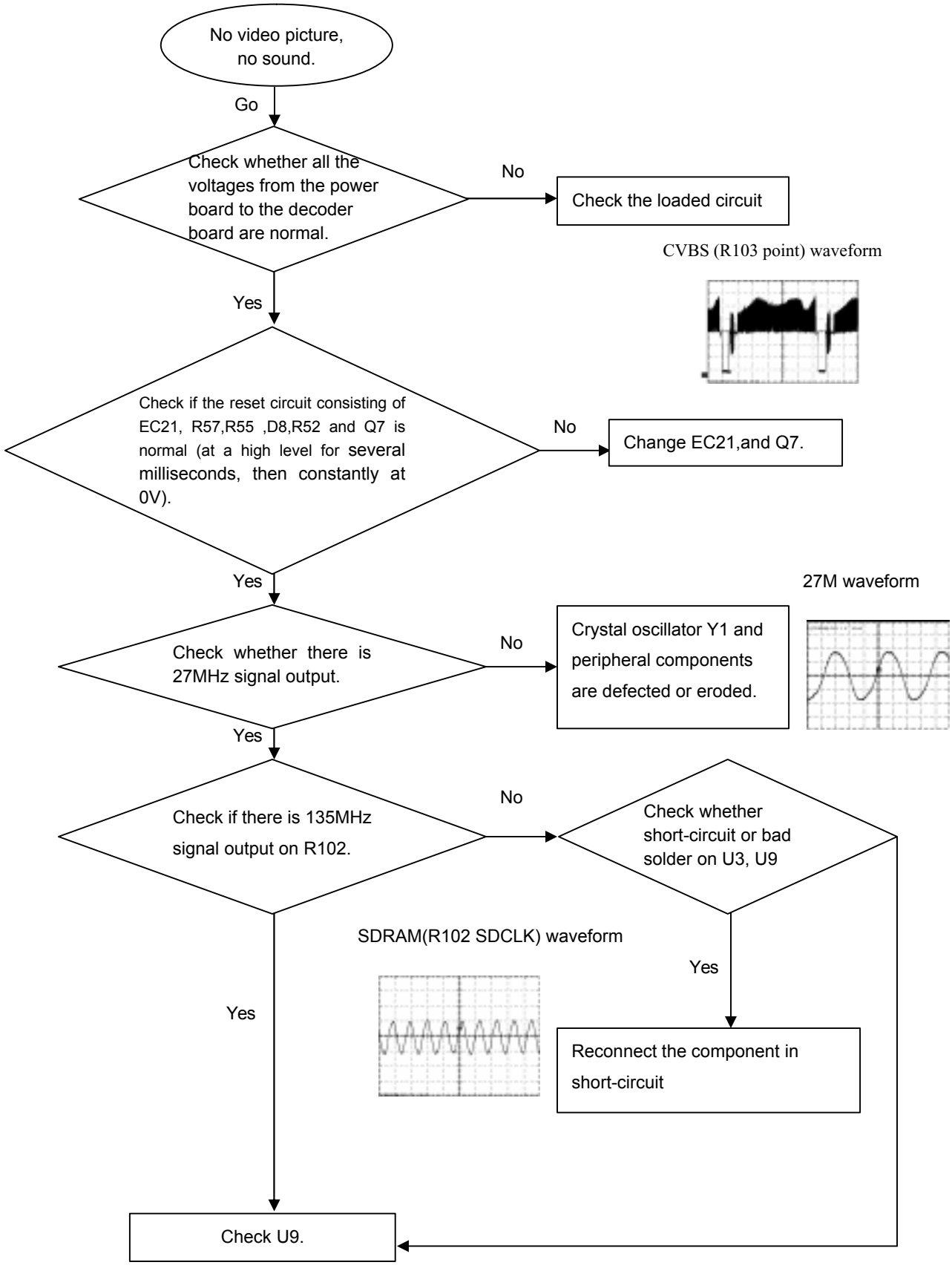

No display on VFD, and buttons don't work

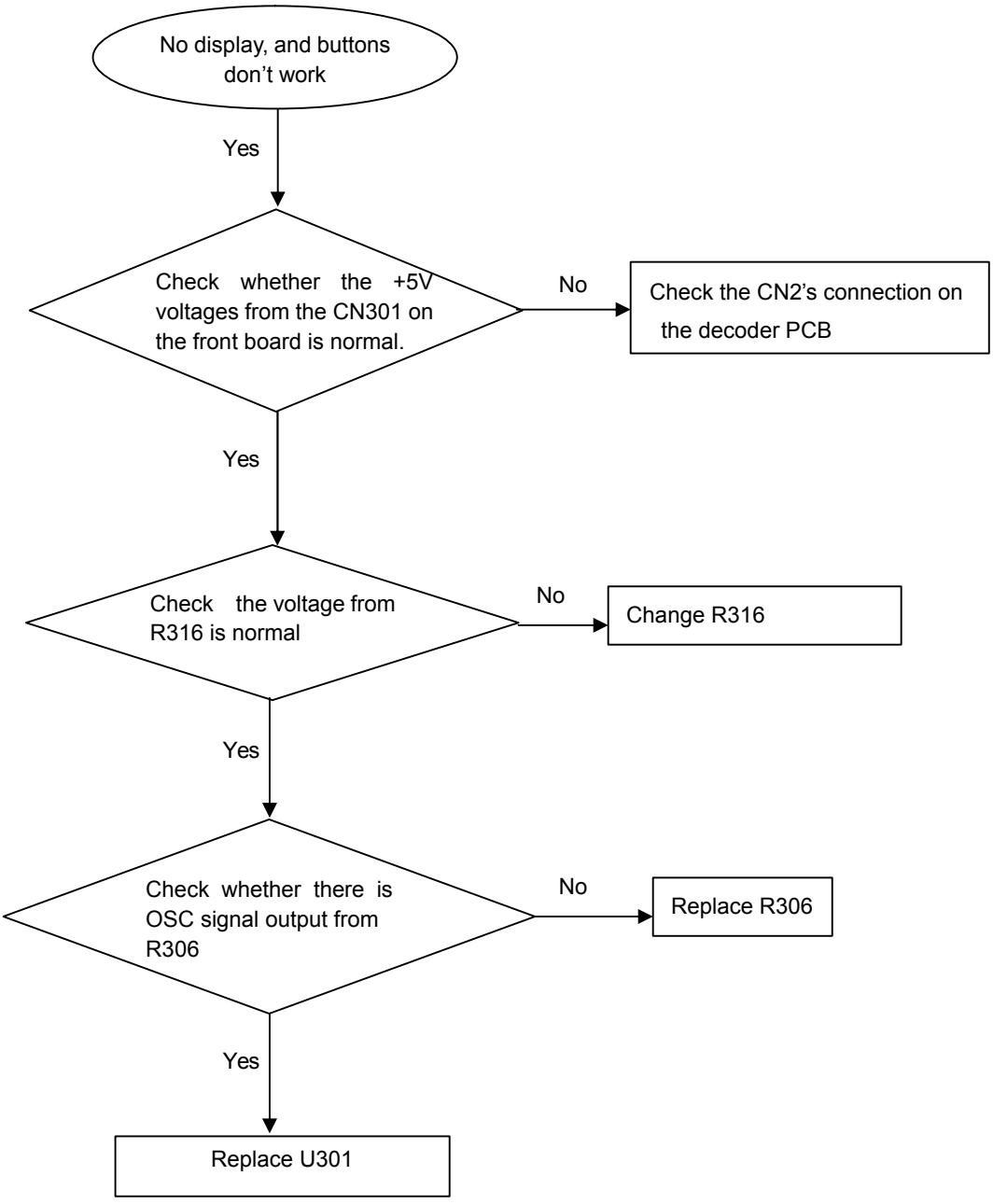

5-1

DVP3180K/93 WIRING DIAGRAM

TO TV SET OR AMPLIFIER

L R COAX

Y U V CVBS

Main board

MUTE
NOISE

AUDIO amplifier
NJM4558

VIDEO SWITCH

VIDEO BUFFER

LM1117MPX
1.8V

motro driver
BA5954/AM5668S

SPHE8202D/8281D
RF+serve+decode

flash
4M

SDRAM
4*16M

AUDIO ADC
CS5340

LOADER

ARIMA OPU+ASA
TVS+TDM-1
LOADER

2.0MM*6
SP-
SP+
LIMIT
GND
SL-
SL+

2.0MM*5
LOAD-
LOAD+
TRAYOUT
GND
TRAYIN

0.5mm*24
1
24

POWER BOARD

2.5MM*8
24V
12V
GND
+12V
GND
GND
3.3V
5V

2.0MM*13
5V
POWER-K
LED1
CLK
STB
DATA
GND
3.3V
IR
-24V
+12V
GND
MIC

2.0MM*12

SW board

2.0mm*4
LED+
LED-
GND
POWER_K

Front& karaoke board

2.0mm*4

NJM4558
karaoke amp

6-1

Front Board **Electric Diagram** For DVP3180K/93

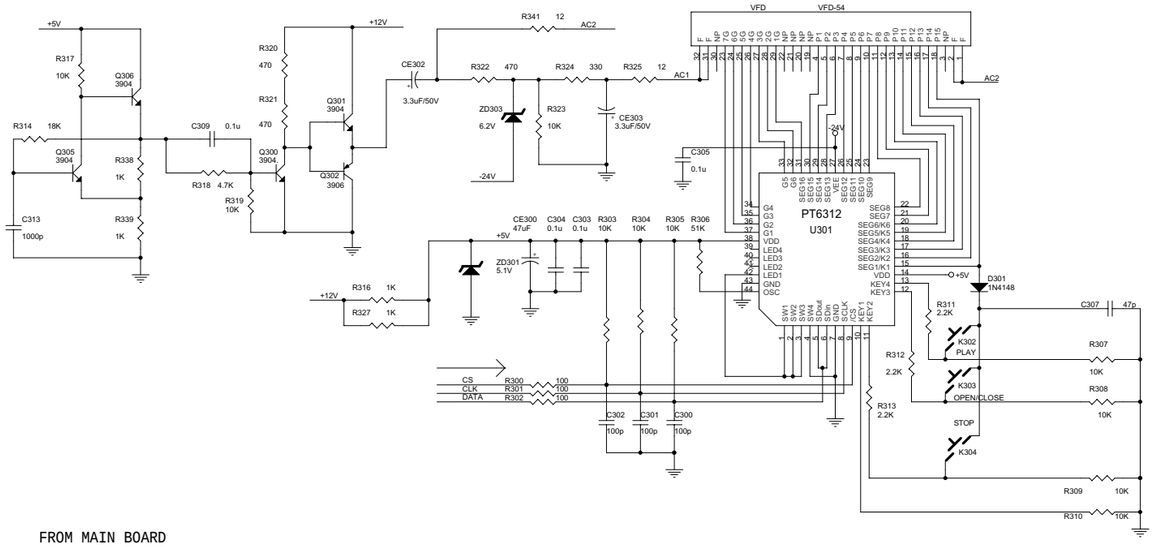

FROM MAIN BOARD

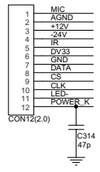

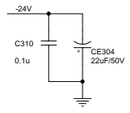

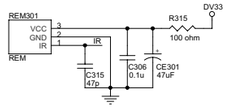

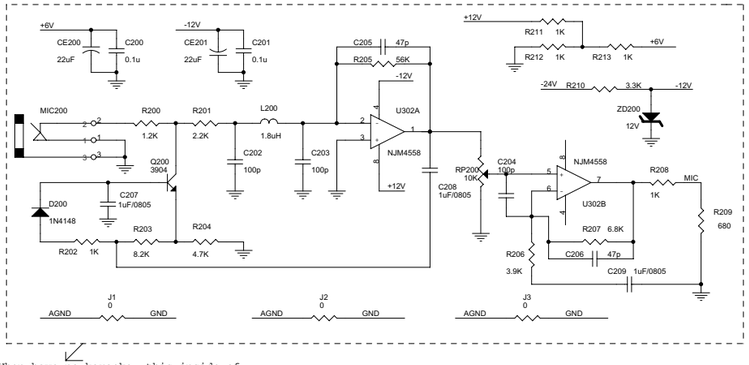

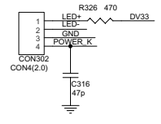

When have no karaoke, this inside of circle a piece is"OPEN"

6-2

Front Board Print-Layout (Top Side) for DVP3180K/93

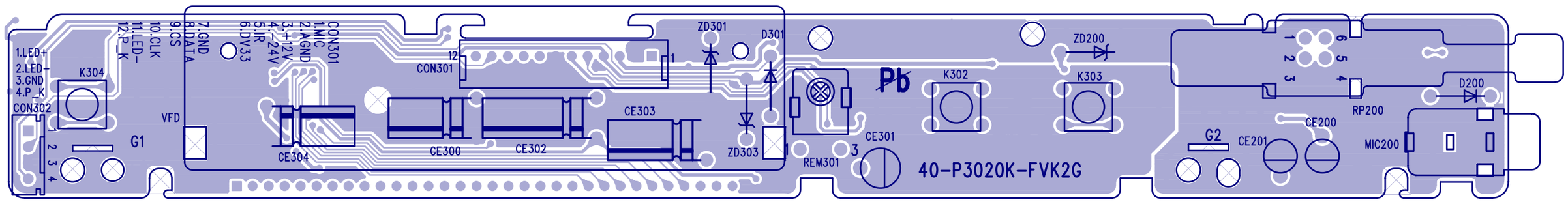

Front Board Print-Layout (Bottom Side) for DVP3180K/93

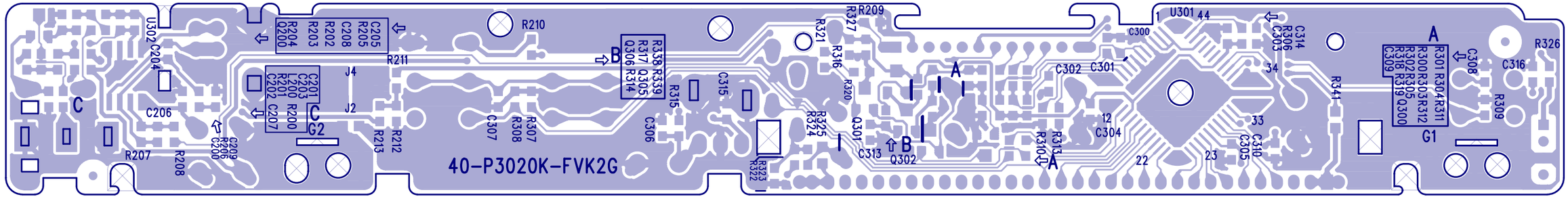

Switch Board Print-Layout (Bottom Side) for DVP3180K/93

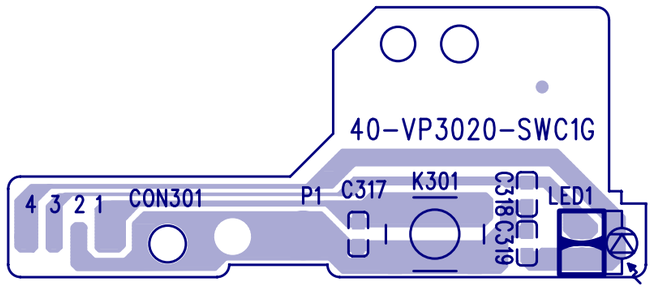

6-3

Power Supply Electric Diagram For DVP3180K/93

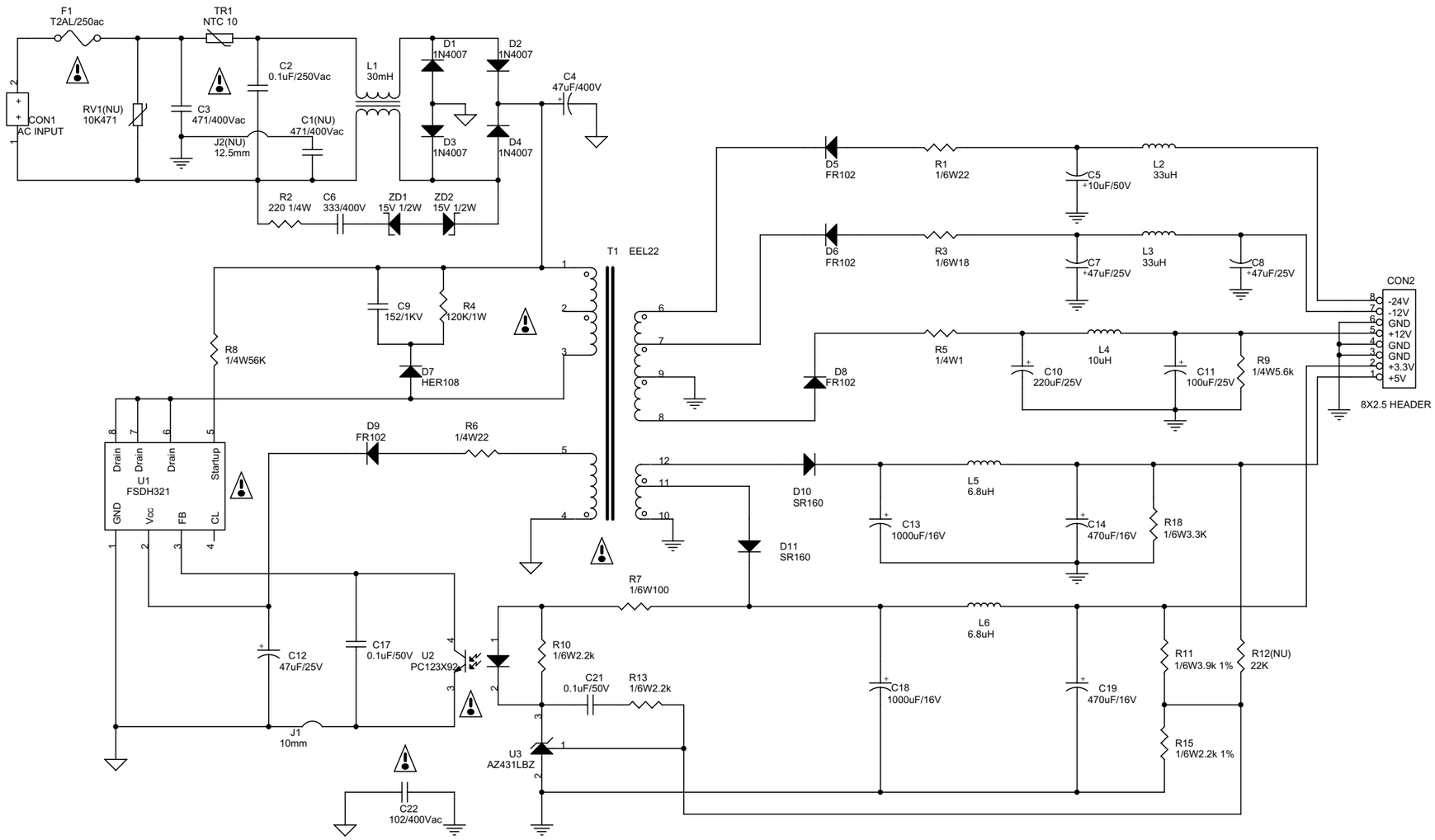

C1	B1	ZD1	B2
C2	A1	ZD2	B2
C3	B1	L1	A2
C4	B2	L2	B4
C5	B4	L3	B4
C6	B1	L4	B4
C7	B4	L5	C3
C8	B4	L6	D4
C9	B2	F1	A1
C10	C3	TR1	A1
C11	C4	RV1	B1
C12	D1	T1	C2
C13	C3	U1	C1
C14	C4	U2	D2
C17	D2	J1	D1
C18	D3	J2	B1
C19	D4	CON1	B1
C21	D2	CON2	B4
C22	D2		
R1	B3		
R2	B1		
R3	B3		
R4	B2		
R5	B3		
R6	C2		
R7	D2		
R8	B1		
R9	C4		
R10	D2		
R11	D4		
R12	D4		
R13	D2		
R15	D4		
R18	C4		
D1	A2		
D2	D2		
D3	B2		
D4	B2		
D5	B3		
D6	B3		
D7	C2		
D8	C3		
D9	C2		
D10	C3		
D11	C3		

*** CAUTION :**

THE PARTS MARKED WITH ⚠ ARE IMPORTANT PARTS ON THE SAFETY.

PLEASE USE THE PARTS HAVING THE DESIGNATED PARTS NUMBER WITHOUT FAIL.

6-4

Power Board Print-layout (Bottom Side) for DVP3180K/93

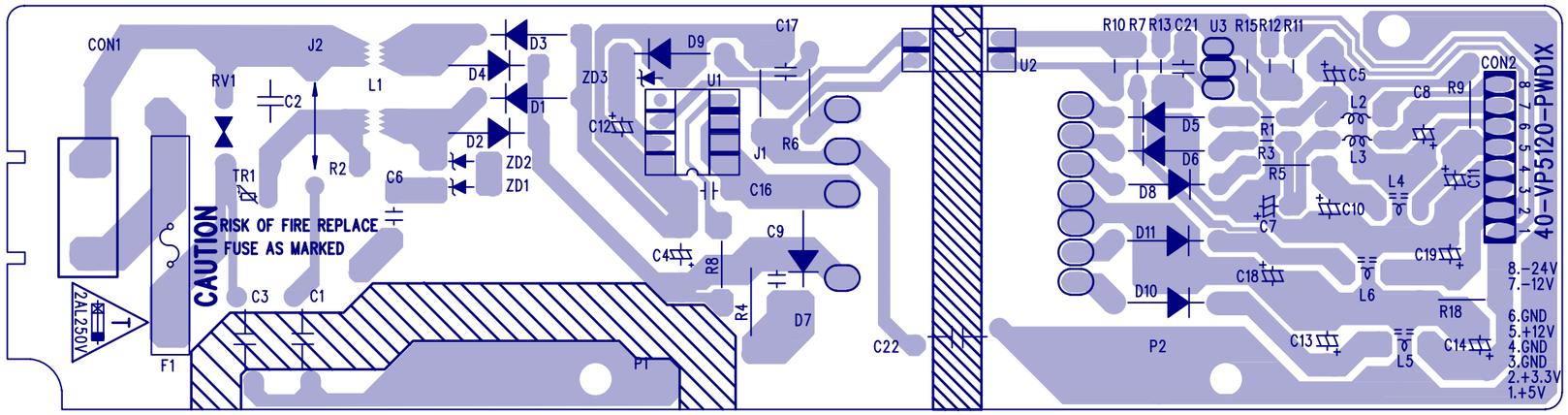

6-5

Main Board Electric Diagram: Power & Connector for DVP3180K/93

PLL power
RF Power
34ma~58ma(64Mx1)
SDRAM POWER +3.3V
Flash POWER +3.3V
3 mA
Audio PLL POWER +3.3V
Video DAC POWER +3.3V
Servo analog +5V power
SYSTEM +5V power
260mA
Video buffer +5V
8202 kernel +1.8V
Video PLL +1.8V
Debug Port
RCA-407
RCA-307

6-6

Main Board Electric Diagram: DSP for DVP3180K/93

SPHE8202D/8281D

Motor Driver AM5668				Motor Driver BA5954			
R53	C36	R54	C37	R54	C36	R53	C37
HD62	33K	1000P	68K	1000P	20K	1000P	39K	1000P
HD65					51K		
ARIMA 681	100K	same as above	10K	same as above	12K	same as above	68K	same as above

MAIN IC	C41	R51
SPHE8202S	1000P	470K
SPHE8202D	0.1U	NC

close to connector!

STAND-BY:0.85W
NORMAL:9.5W
MAX: 11W

6-7

Main Board Electric Diagram: Memory for DVP3180K/93

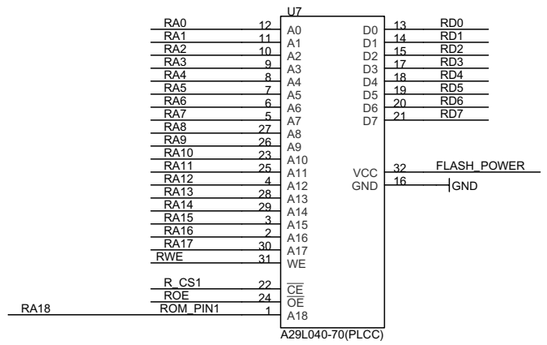

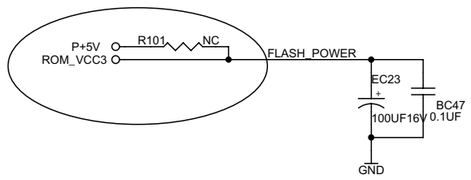

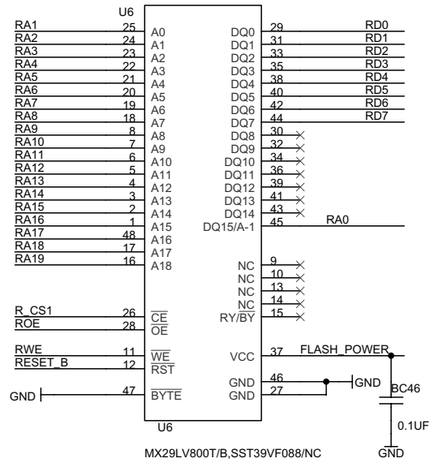

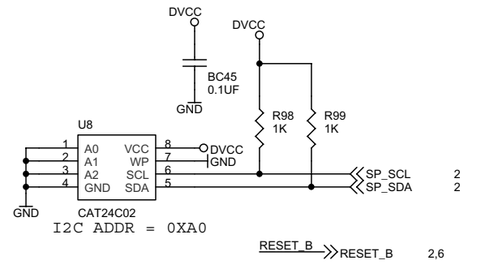

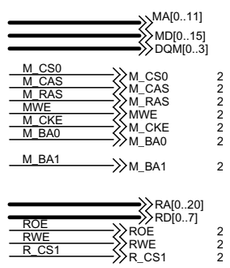

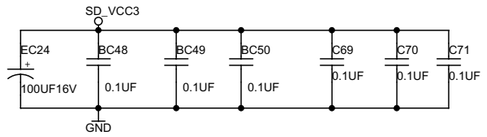

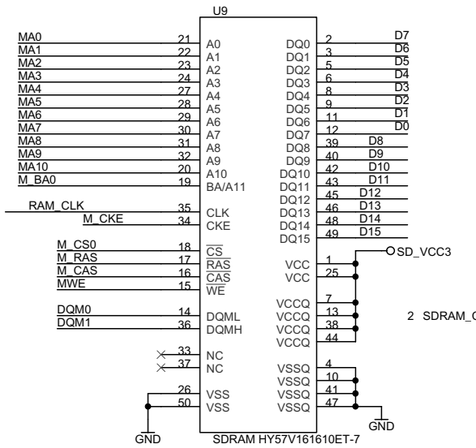

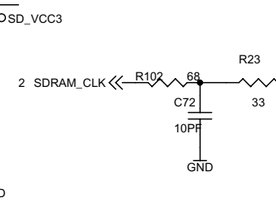

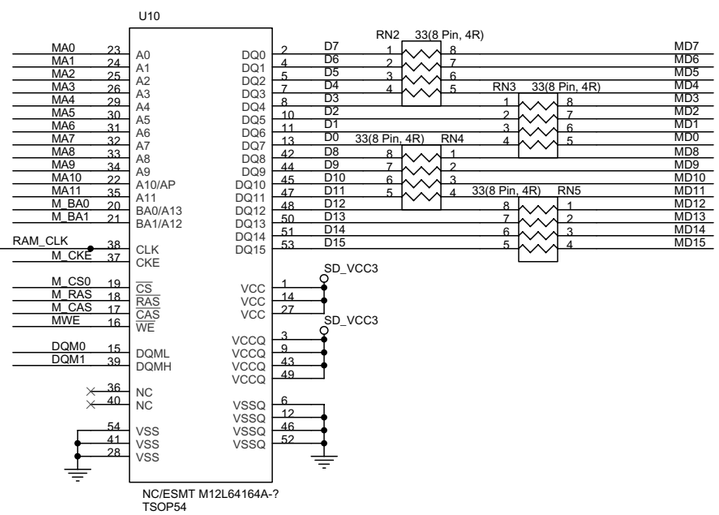

BC45	A4
BC46	B3
BC47	B2
BC48	B3
BC49	B3
BC50	B3
C69	B4
C70	B4
C71	B4
C72	C2
EC23	B2
EC24	B3
R101	B1
R102	C2
R23	C2
R98	A4
R99	A4
RN2	C4
RN3	C4
RN4	C4
RN5	C4
U10	C3
U6	A3
U7	A2
U8	A4
U9	B1

6-8

Main Board Electric Diagram: Video Buffer for DVP3180K/93

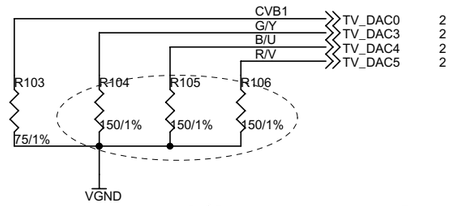

1/2 current config

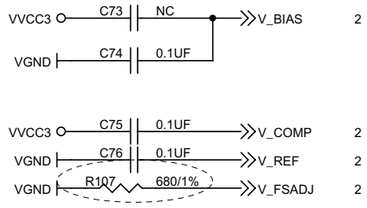

1/2 current config

TV0	TV3	TV4	TV5
CVB	Y	Cb	Cr
CVB	Y (S-Video)	CVB	C (S-Video)
CVB	G	B	R

C73	A3
C74	A3
C75	A3
C76	A3
C77	B1
C78	B4
C79	B1
C80	B2
C81	B3
C82	B4
C83	C1
C84	C4
C85	C1
C86	C2
C87	C4
C88	C4
L30	B1
L31	B4
L32	C1
L33	C4
Q12	B1
Q13	B3
Q14	C1
Q15	C3
R103	A1
R104	A1
R105	A1
R106	A1
R107	A3
R108	B1
R109	B3
R110	B1
R111	B3
R112	C1
R113	C3
R114	C1
R115	C3

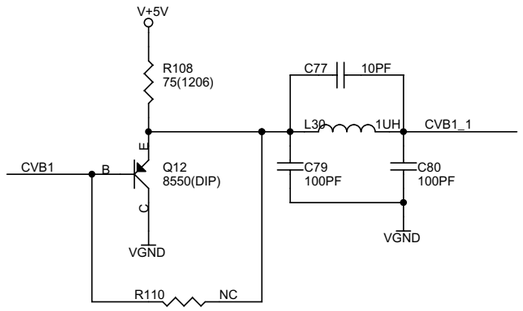

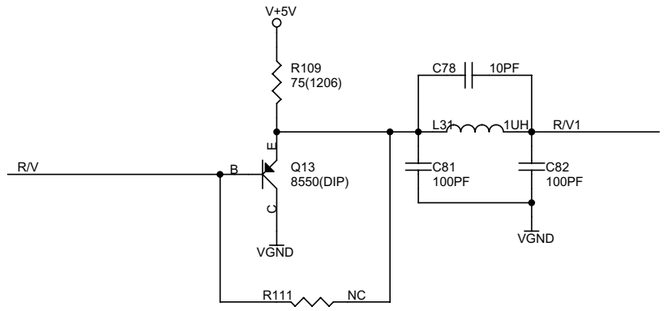

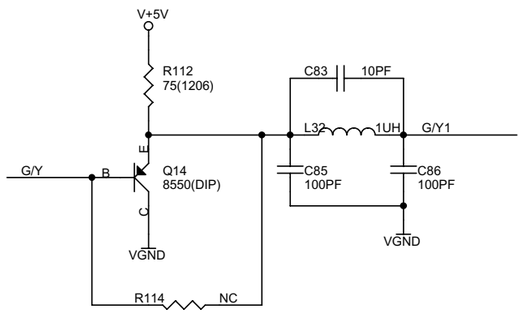

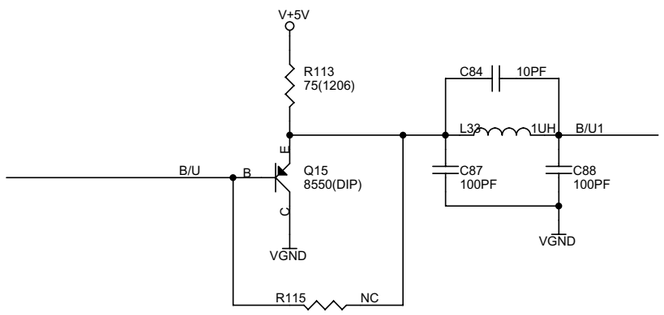

VIDEO DAC	R107	R110	R111	R114	R115	R104	R105	R106
Full Current	390	0	0	0	0	75	75	75
Half Current	680	NC	NC	NC	NC	150	150	150

Actual value:37.5R

6-9

Main Board Electric Diagram: Audio & Filter for DVP3180K/93

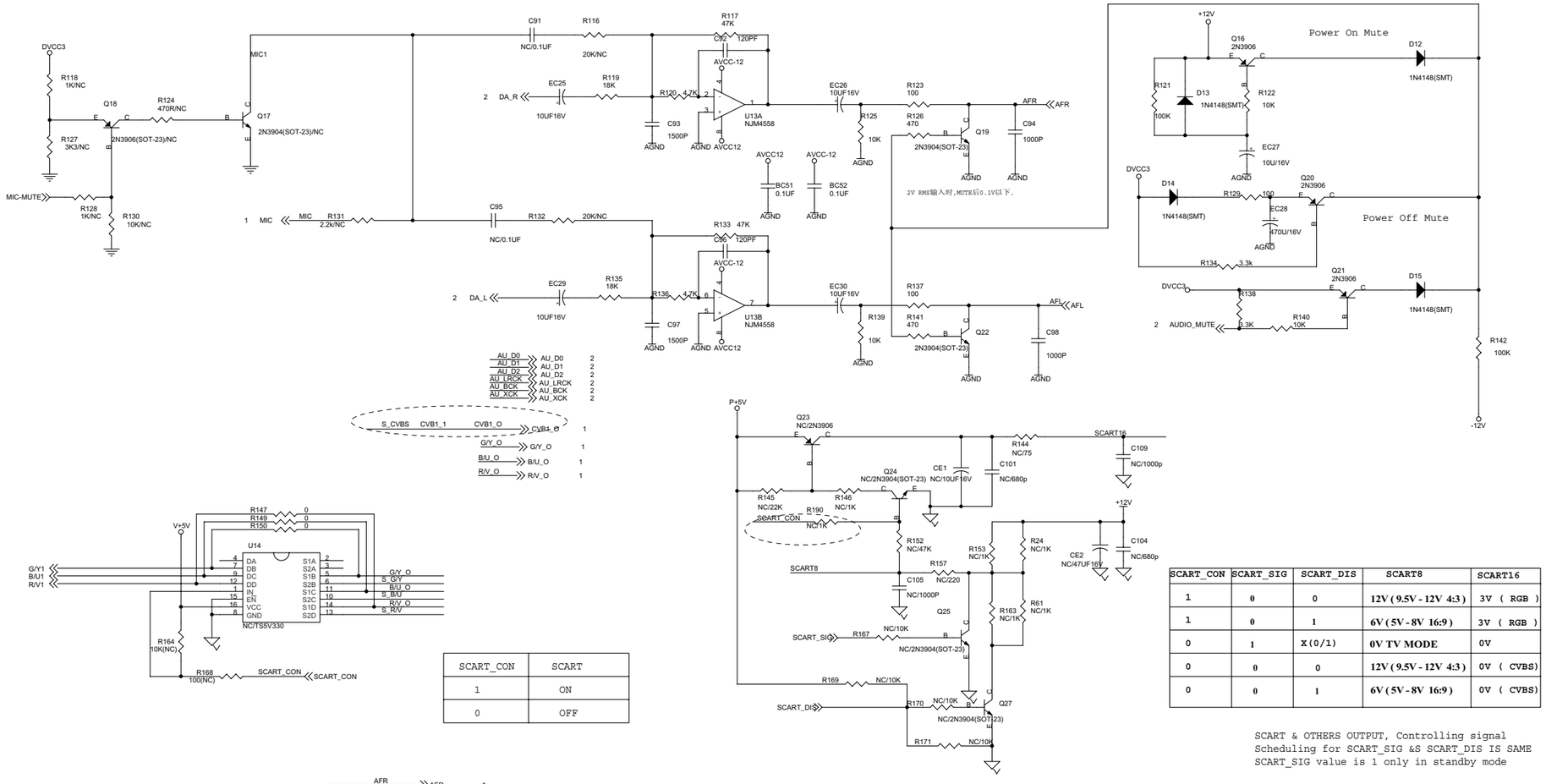

SCART_CON	SCART
1	ON
0	OFF

SCART_CON	SCART_SIG	SCART_DIS	SCART8	SCART16
1	0	0	12V (9.5V - 12V 4:3)	3V (RGB)
1	0	1	6V (5V - 8V 16:9)	3V (RGB)
0	1	X(0/1)	0V TV MODE	0V
0	0	0	12V (9.5V - 12V 4:3)	0V (CVBS)
0	0	1	6V (5V - 8V 16:9)	0V (CVBS)

SCART & OTHERS OUTPUT, Controlling signal
Scheduling for SCART_SIG &S SCART_DIS IS SAME
SCART_SIG value is 1 only in standby mode

BC51	A3
BC52	A3
C101	A3
C104	B4
C105	B4
C109	B4
C110	B4
C111	C5
C112	C4
C113	C2
C114	C2
C115	C4
C116	D3
C118	D4
C119	D4
C120	D1
C121	D4
C122	D2
C123	D2
C91	C2
C92	A2
C93	A3
C94	A3
C95	A4
C96	A2
C97	A3
C98	B3
CE1	B4
CE2	B4
CN10	B4
D12	C3
D13	A5
D14	A4
D15	A4
D16	A5
D17	C4
D18	C4
D19	C4
D20	C5
D21	C5
D22	C4
D23	C4
EC25	D4
EC26	A2
EC27	A3
EC28	A5
EC29	A4
EC30	A2
EC31	A3
FB1	C2
Q16	C2
Q17	A5
Q18	A1
Q19	A1
Q20	A4
Q21	A5
Q22	A5
Q23	B4
Q24	B3
Q25	B4
Q27	B4
	C4

R116	A3
R117	A3
R118	A1
R119	A3
R120	A3
R121	A4
R122	A5
R123	A4
R124	A1
R125	A3
R126	A4
R127	A1
R128	A1
R129	A5
R130	A1
R131	A2
R132	A2
R133	A3
R134	A5
R135	A3
R136	A3
R137	A4
R138	A5
R139	B3
R140	B5
R141	B4
R142	B5
R144	B4
R145	B3
R146	B3
R147	B2
R150	B2
R152	B4
R153	B4
R157	B4
R163	B4
R164	B1
R167	B3
R168	C1
R169	C3
R170	C4
R171	C4
R173	C2
R174	C2
R175	C1
R176	C1
R177	C2
R179	C1
R180	D1
R181	D1
R182	D1
R183	D2
R19	C3
R190	B3
R24	B4
R61	B4
U13A	A3
U13B	A3
U14	B1
U15	C2

6-10

Main Board Print-Layout (Top Side) for DVP3180K/93

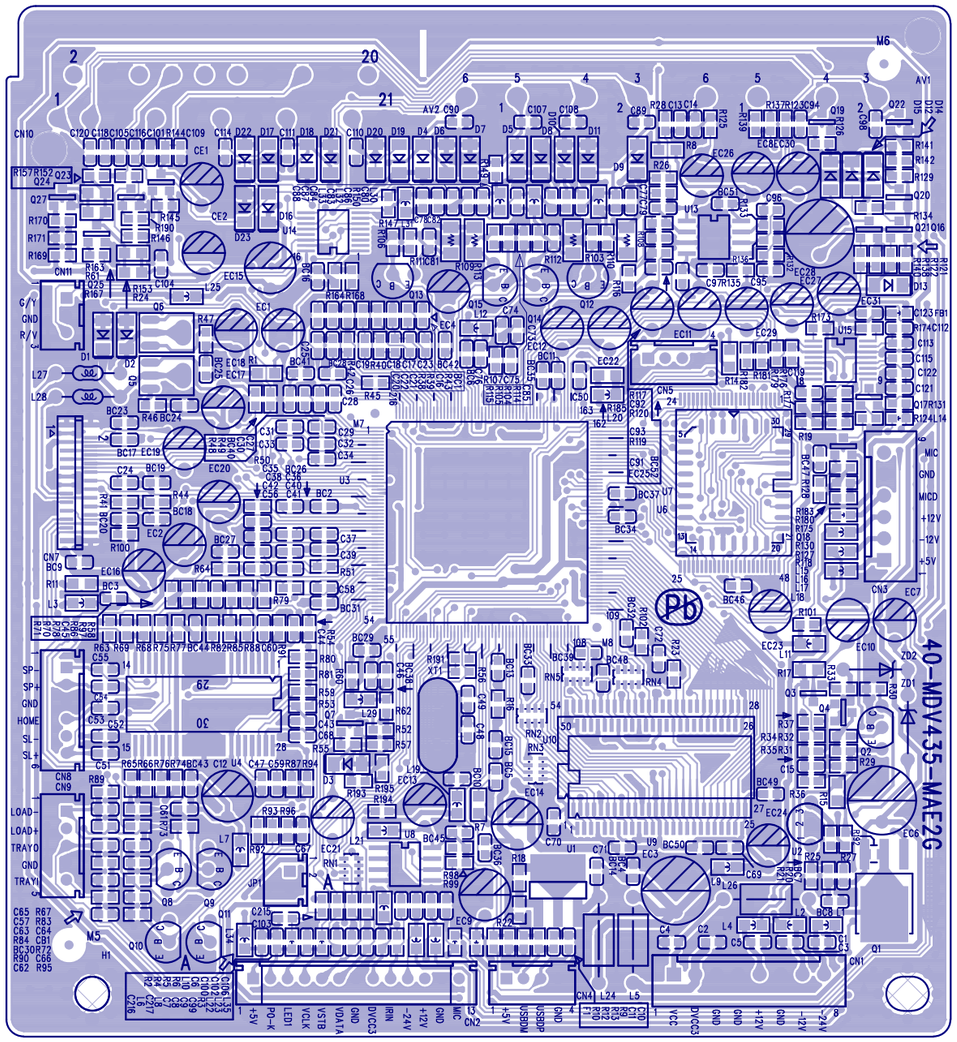

6-11

Main Board Print-Layout (Bottom Side) for DVP3180K/93

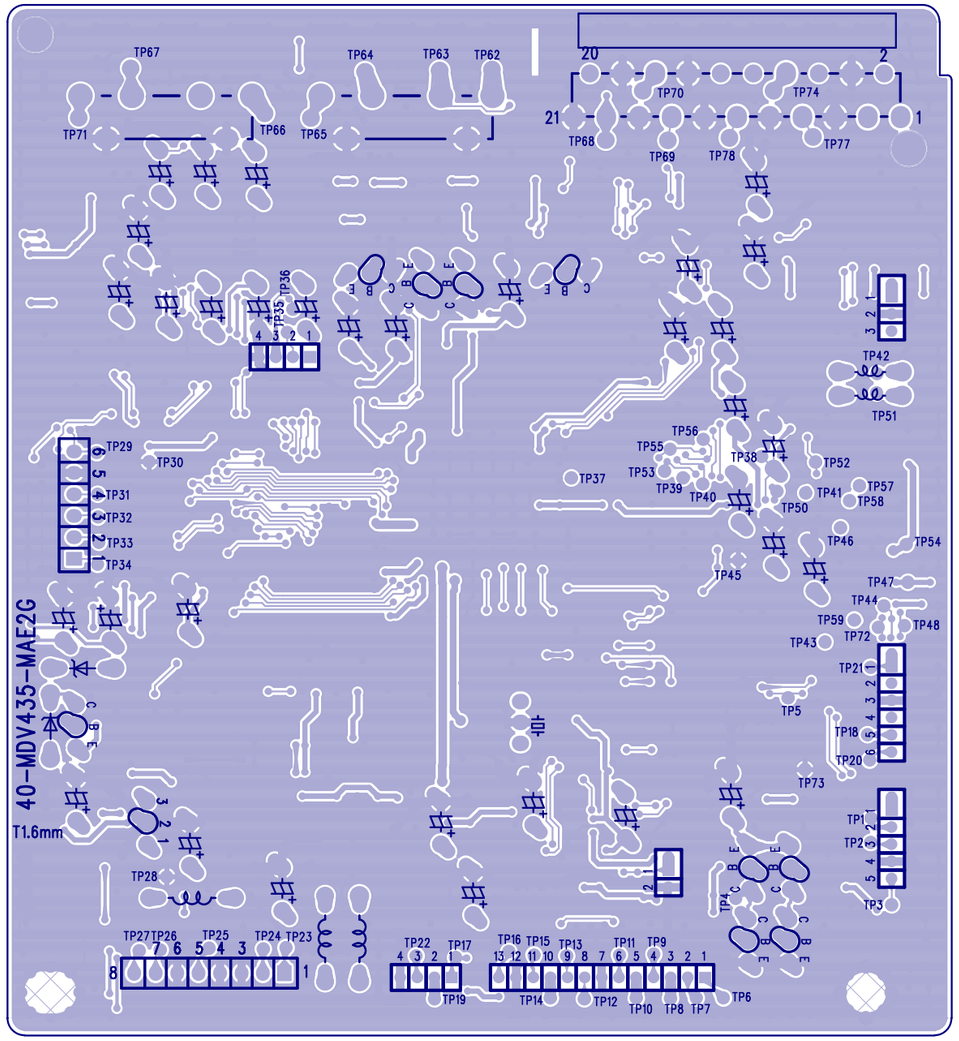

DVP3180K/93 Mechanical Exploded View

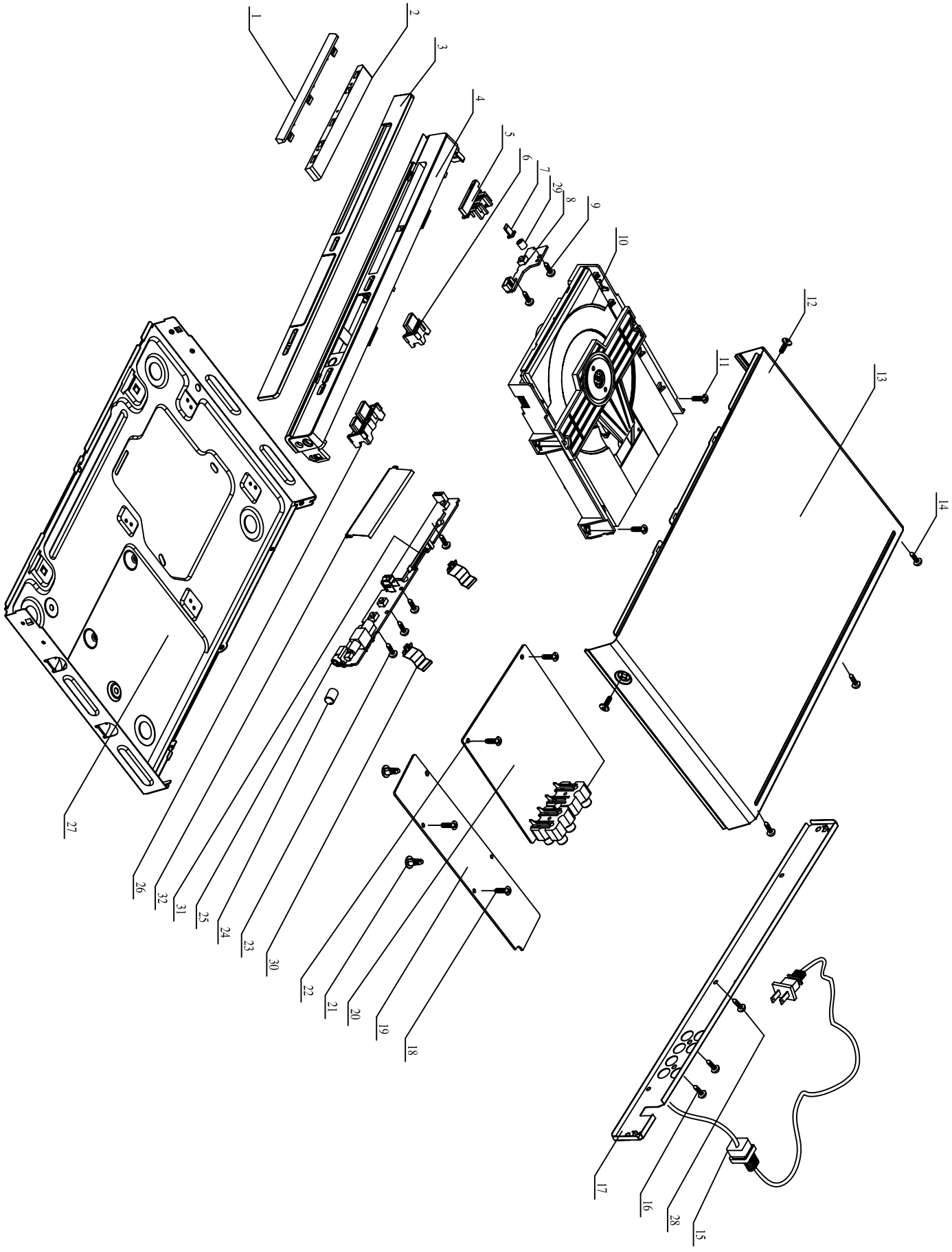

Remark: Ass'y1 is the assembled component for location1,2
Ass'y2 is the assembled component for location3,4,5,6,26

ENCASING & ACCESSORIES PARTS LIST

No	12NC No.	Part Name	Q'ty
Ass'y1	996510001116	Front Door Ass'y	1
Ass'y 2	996510001117	Front Panel Ass'y	1
7	/	Standby Light	1
8	996500034178	Ass'y-Switch Board	1
10	996500035377	Loader	1
13	/	Top Cover	1
15	996510000418	Power Cord	1
17	/	Rear Plate	1
19	996500034189	Ass'y-Power Board	1
20	996510001111	Ass'y-Main Board	1
21	/	PCB Support Post	1
24	/	Knob	1
25	996500034179	Ass'y-Front Board	1
27	/	Bottom Cover	1
29	/	LED Supporter	1
30	/	Grounding Plate	1
31	/	VFD Bracket	1
32	/	ESD Washer	1

Accessory

RC	996510001112	REMOTE CONTROL	1
VC	996510001113	VIDEO CABLE 1500mm	1
AC	996510001114	AUDIO CABLE 1500mm WHITE/RED	1

Cable

CON2	996510000546	8PIN HS	1
CON302	996510000547	4P HS	1
CON301	996510001115	FFC CABLE	1
FFC	996510001108	24PIN FLAT WIRE	1

SCREW LIST

No	12NC No.	Part Name	Q'ty
9	/	S/T SCREW B 2.6 X 8 BF	2
11	/	MACHINE SCREW	2
12	/	M/C SCREW TRIANGLE W 3 X 6	2
14	/	TRIANGLE M/C SCREW B 3 X 6	3
16	/	S/T SCREW B 3 X 8 BF	2
18	/	TRIANGLE M/C SCREW B 3 X 6	2
22	/	TRIANGLE M/C SCREW B 3 X 6	2
23	/	S/T SCREW B 2.6 X 8 BF	4
28	/	TRIANGLE M/C SCREW B 3 X 6	1

Note:Only the parts mentioned in this list are normal service spare parts

REVISION LIST

Version 1.0
* Initial release

Remark: This Service manual only for Philips Service repairment, Please Don't transmitte or forward it to others.